**CLIFF**

| ISS. | AMEND | DATE |
|---|---|---|
| 1 | ISSUED | 22/08/25 |

| DESCRIPTION | MATERIAL |
|---|---|
| BODY | PP UL94-HB |
| STRAIN RELIEF | PP UL94-HB |
| SHROUD | PA66 UL94-V2 |
| COLLET | PP UL94-HB |
| SPINDLE | BRASS Ni PLATE |
| LANTERN | BeCu - Ni PLATE |
| END CAP | POM UL94-HB |
| SPRING | SPRING STEEL |

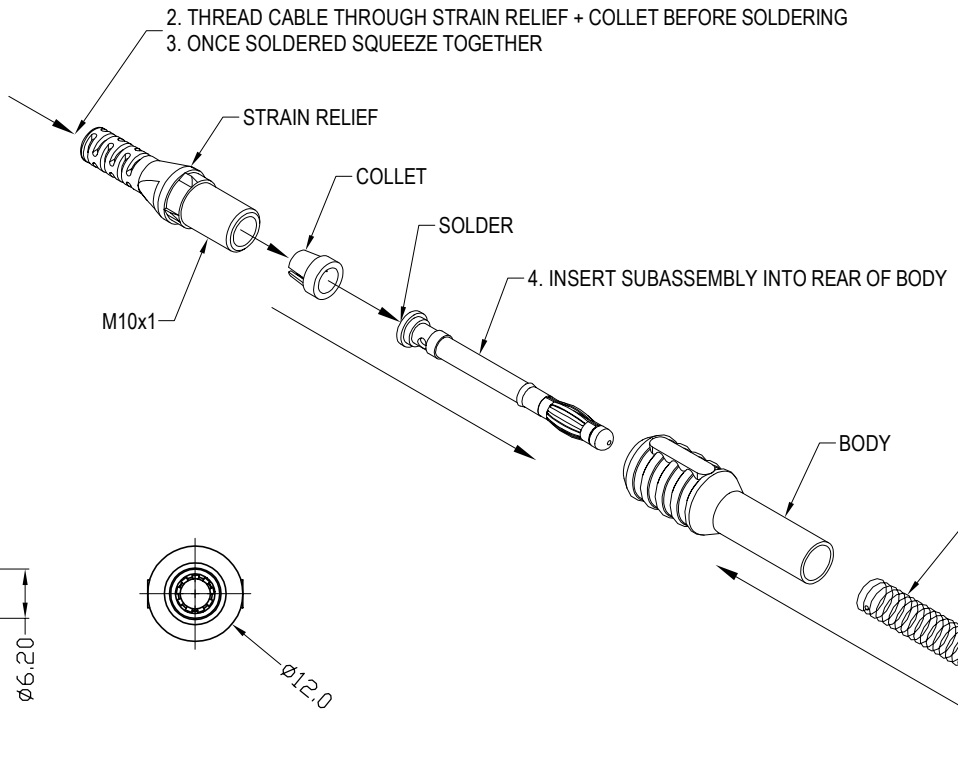


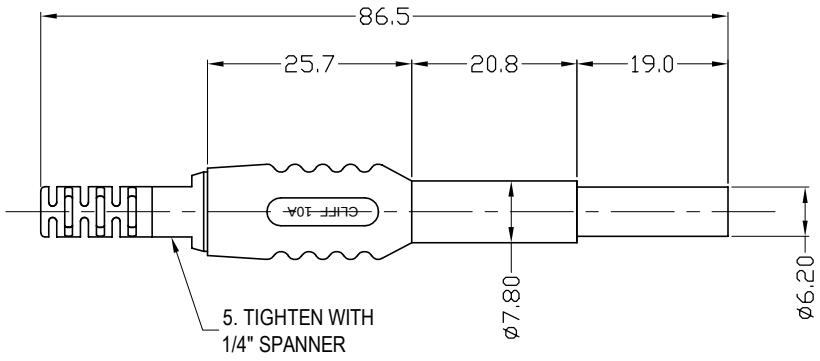





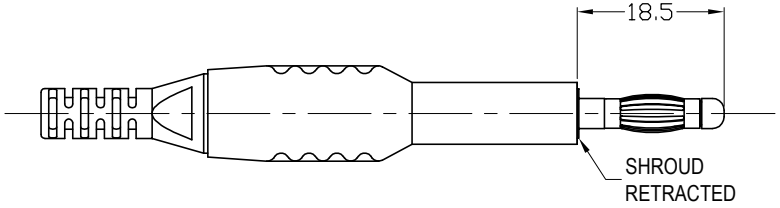




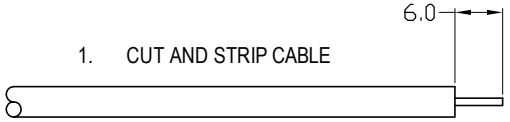


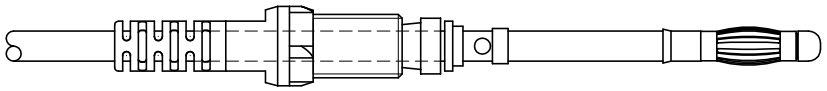


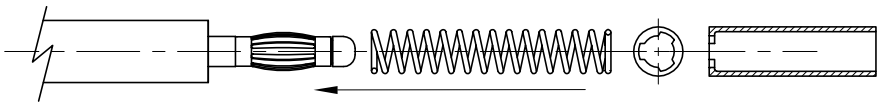


1. CUT AND STRIP CABLE
2. THREAD CABLE THROUGH STRAIN RELIEF + COLLET BEFORE SOLDERING
3. SOLDER AND SQUEEZE ALL PARTS TOGETHER
4. INSERT CABLE SUBASSEMBLY INTO REAR OF BODY
5. TIGHTEN STRAIN RELIEF WITH 1/4" SPANNER
6. INSERT SPRING AND SHROUD OVER LANTERN

**RoHS COMPLIANT**

TOLERANCE
NO DEC. PLACE ±
1 DEC. PLACE ±
2 DEC. PLACE ±
HOLE Ø ±
ANGLES ±
UNLESS OTHERWISE STATED

**Cliff Electronic Components Ltd.**
76 Holmethorpe Avenue, Holmethorpe Industrial Estate,
Redhill, Surrey, RH1 2PF, England, UK
Tel: 01737-771375 Fax: 01737-766012 Website: www.cliffuk.co.uk

THE CONTENTS OF THIS DOCUMENT MUST NOT BE COPIED OR DISCLOSED TO A 3rd PARTY WITHOUT WRITTEN PERMISSION OF CLIFF UK. © 2025

DIMENSIONS IN MILLIMETERS UNLESS OTHERWISE STATED. WORK TO DIMENSIONS. REMOVE ALL BURRS. IF IN DOUBT ASK.

3rd ANGLE PROJECTION:

DO NOT SCALE

MATERIAL:

FINISH:

DRAWN: T.J.O.

APPROVED: D.P.J.

TITLE: 4mm PLUG P14XASR

DRWG. No. FCR6381ASM

FORM: A4DRWGH