CLIFF

ISS.	AMEND	DATE
1	1st DRAWN	19/03/02
2	GOLD VARIANT ADD	26/09/08
3	UPDATE+DEL FM1002G	12/10/21
4	ADD STEREO FM1003	26/11/25

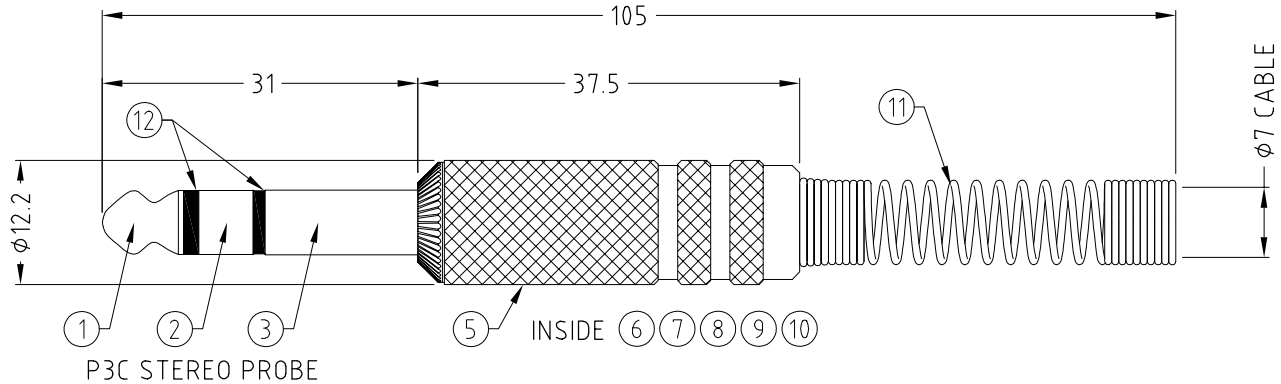

PART No.	TYPE
FM1002	P1C MONO
FM1003	P3C STEREO

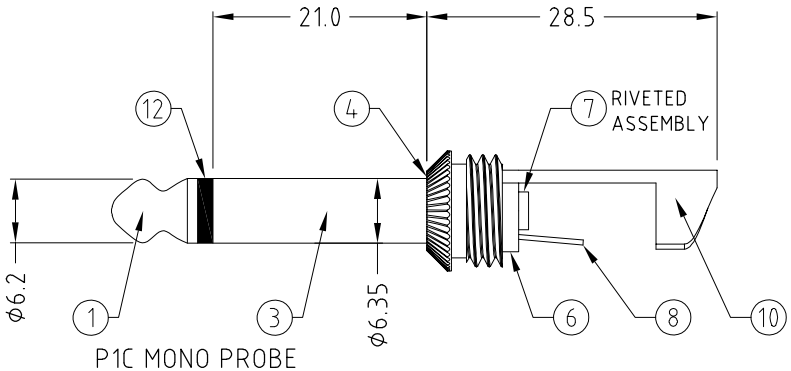

ITEM	DESCRIPTION	MATERIAL	FINISH
1	TIP	BRASS	NICKEL PLATE
2	RING	BRASS	NICKEL PLATE
3	SLEEVE	BRASS	NICKEL PLATE
4	NOSE	ZINC ALLOY	NICKEL PLATE
5	BODY	ZINC ALLOY	NICKEL PLATE
6	BUSHES	PP	BLACK / WHITE
7	CENTRE RIVET	STEEL	NICKEL PLATE
8	TIP CONTACT	BRASS	NICKEL PLATE
9	RING CONTACT	BRASS	NICKEL PLATE
10	SLEEVE CONTACT	STEEL	NICKEL PLATE
11	STRAIN RELIEF	SPRING STEEL	NICKEL PLATE
12	PROBE INSULATORS	PA6	BLACK

RoHS ✓ COMPLIANT

TOLERANCE
NO DEC. PLACE ±
1 DEC. PLACE ±
2 DEC. PLACE ±
HOLE Ø ±
ANGLES ±
UNLESS OTHERWISE STATED

Cliff Electronic Components Ltd.
76 Holmethorpe Avenue, Holmethorpe Industrial Estate,
Redhill, Surrey, RH1 2PF, England, UK
Tel: 01737-771375 Fax: 01737-766012 Website: www.cliffuk.co.uk

THE CONTENTS OF THIS DOCUMENT MUST NOT BE COPIED OR DISCLOSED TO A 3rd PARTY WITHOUT WRITTEN PERMISSION OF CLIFF UK. © 2002

DIMENSIONS IN MILLIMETERS UNLESS OTHERWISE STATED. WORK TO DIMENSIONS. REMOVE ALL BURRS. IF IN DOUBT ASK. 3rd ANGLE PROJECTION: DO NOT SCALE

MATERIAL: SEE TABLE
FINISH: SEE TABLE
DRAWN: C.A.M.J. APPROVED: R.W.T.

TITLE: 1/4" (6.35mm) SCREENED JACK PLUG (P1C/P3C)

DRWG. No. FM1002

FORM: A4DRWGH