USB2.0 A-A WHITE FEEDTHROUGH CONNECTOR

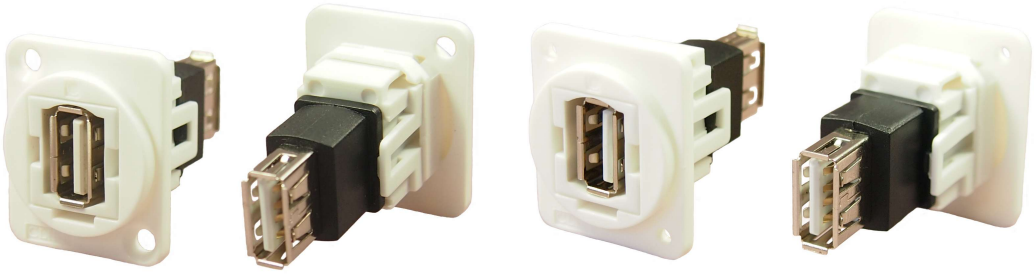

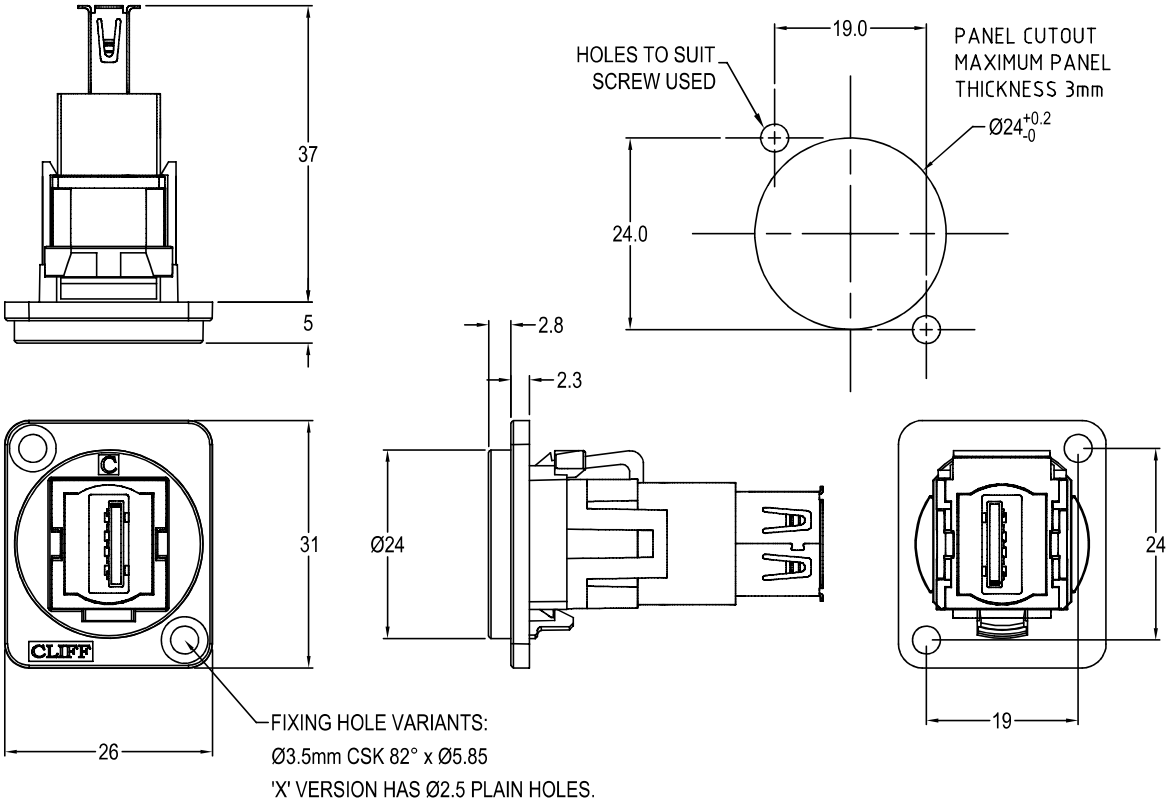

Feedthrough Features

- Fits standard XLR Ø24mm cutout.
- No soldering or punch termination. Use standard cable for each connector style.
- Front or rear mounted.
- Low rear profile

General:

Please note: Functionality is affected by cable quality, length and cable wiring configuration.

Other models available:

Part No.

CP30208NW USB2.0 A-A White plastic frame, CSK holes

CP30208NXW USB2.0 A-A White plastic frame, PLAIN holes

Material:

1.Insert: ABS UL94 HB
2.Frame: Polyamide UL94 V-2
3.Inner Overmouldings: PE + PVC
4.Shell: Nickel plated steel
5.Contacts: Gold Plated

Notes:

1.Voltage rating: 30V ac
2.Current rating: 1.5 A max
3.Contact resistance: 50mΩ max
4.Insulation resistance: 20MΩ min
5.Dielectric withstanding voltage: 500V AC
6.Operating Temperature: -20°C to 50°C

© CLIFF 10/20206 ISS.3

For further information, contact sales@cliffuk.co.uk

Cliff Electronic Components Limited,
76 Holmethorpe Avenue, Holmethorpe Ind. Estate,
Redhill, Surrey RH1 2PF U.K.
Tel: +44 (0)1737 771375 Fax: +44 (0)1737 766012

www.cliffuk.co.uk

RoHS