USB2.0 B-A WHITE FEEDTHROUGH CONNECTOR



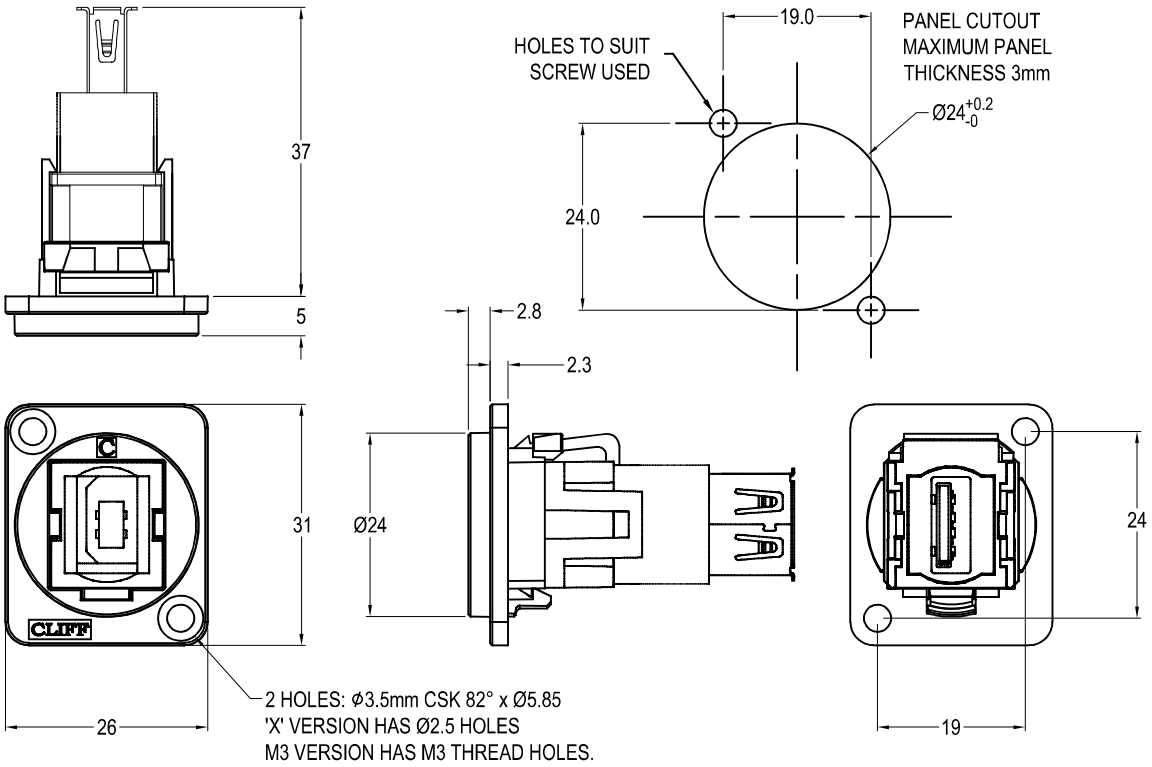

Feedthrough Features

- Fits standard XLR Ø24mm cutout.
- No soldering or punch termination. Use standard cable for each connector style.
- Front or rear mounted.
- Low rear profile

General:

Please note: Functionality is affected by cable quality, length and cable wiring configuration.

VARIANTS

Part No.

CP30207NW USB2.0 B-A White plastic frame, CSK holes
CP30207NXW USB2.0 B-A White plastic frame, PLAIN holes

Material:

1.Insert: ABS
2. Plastic Frame: Polyamide UL94 V2
3. Shell: Nickel plated steel
4. Contacts: Gold Plated

Notes:

1. Voltage rating: 30V AC
2. Current rating: 1.5 A max
3. Contact resistance: 50mΩ max
4. Insulation resistance: 20MΩ min
5. Dielectric withstanding voltage: 500V AC
6. Operating Temperature: -20°C to 50°C

© CLIFF 10/2026 ISS.1

For further information, contact sales@cliffuk.co.uk

Cliff Electronic Components Limited,
76 Holmethorpe Avenue, Holmethorpe Ind. Estate,
Redhill, Surrey RH1 2PF U.K.
Tel: +44 (0)1737 771375 Fax: +44 (0)1737 766012

www.cliffuk.co.uk

RoHS